Reg. No. | | | | | | | | | | |

[18MTASD101]

FIRST SEMESTER M.TECH EXAMINATION, JANUARY 2019

AEROSPACE STRUCTURES

Time: 03 Hours **Maximum Marks:100**

Instructions : **i. Answer any five full questions. Question No. 1 and 2 are compulsory.**

ii. Draw neat sketches wherever necessary.

iii. Make suitable assumptions where necessary.

1. a. What are statically indeterminate or redundant structures? **04**

b. Portal frame with end conditions as shown in Fig.1, all the members have cross sectional area = 10 cm^2. Determine the vertical deflection at D. Take second moment of area of cross section I = 100 cm^4 and E = $7*10^5$ Kg/cm^2. **06**

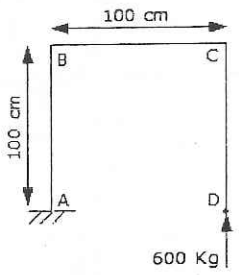

Fig. 1

2. A large plate (100cmX100cm) has a small hole of radius 1cm. The plate is loaded by compressive stress equal along x- and y- directions and a shear stress as shown in the figure 2. Calculate the stress concentration and its location along the circular hole periphery. **20**

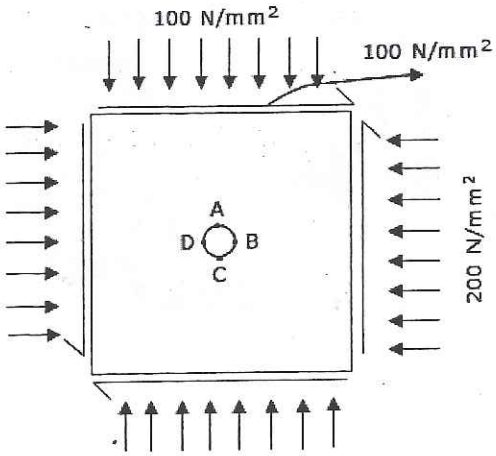

Fig. 2

3. a. What are the stresses developed in a bar of length L, when it is subjected to free expansion of additional length a. Young's modulus of the material is E. **04**

b. A bar of length 100cm and 1 cm^2 area of cross-section is between two supports A and B which are 102cm apart. If the temperature of the bar is increased by 100^0C determine the stresses developed in the bar. Assume $\alpha = 0.0005 /0^0C$ as thermal coefficient of expansion and $E=7X10^5 kg/cm^2$. **16**

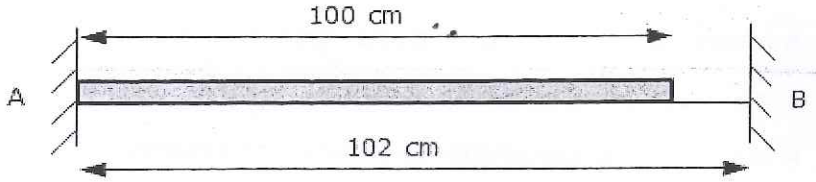

OR

4. a. Differentiate between stress concentration and stress singularity. **04**

b. Write down the boundary conditions on all the edges of the 2- dimensional field shown in the figure under the load system shown. Also identify where you have stress concentrations and where there is a possibility of stress singularities. **16**

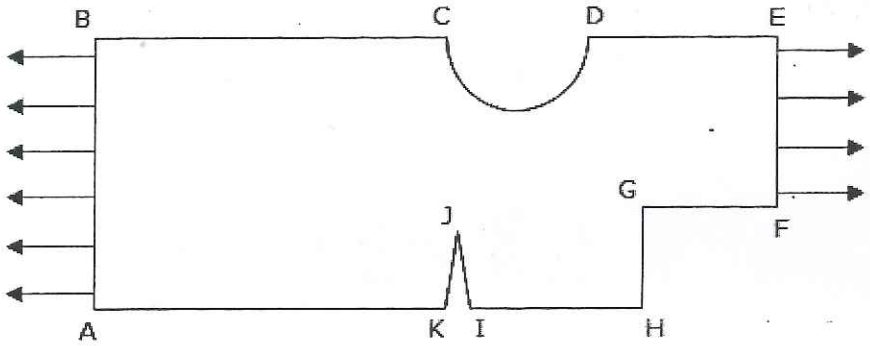

5. a. Define shear center of a cross section. **04**

b. A channel section is supported by 7 flanges each of 50 sqmm area. Find the shear center of the section. The webs carry shear only. **16**

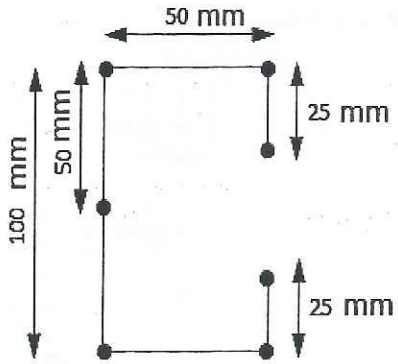

OR

6. a. A flange is attached to a shear web over a length L. The flange carries loads P_1 and P_2 at the two ends. Write down the equation for shear flow q in the web. **04**

b. A web with stiffeners as shown is distributing concentrated forces as shown below. Find the shear flows in all the webs. **16**

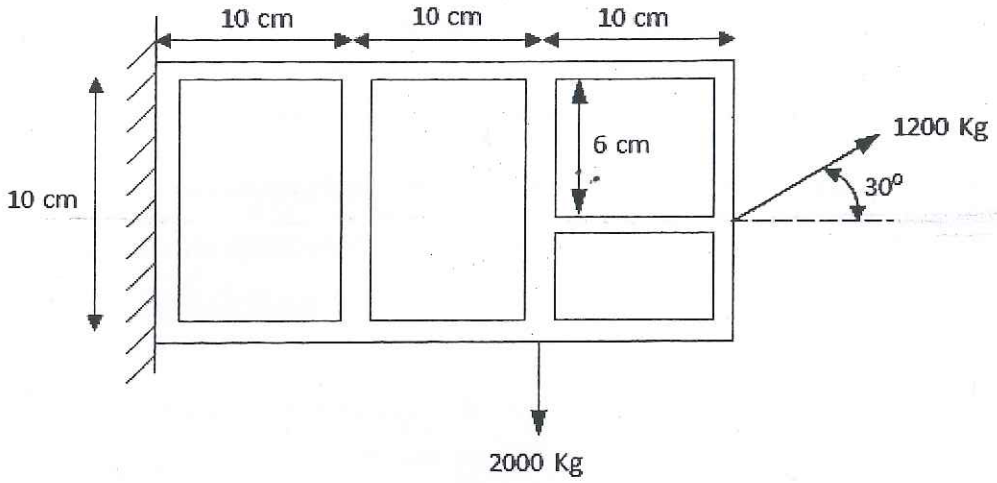

7. a. Explain Bredt-Batho equation. **04**

b. Find the shear flow in all the webs in a 3-cell box for T = 30,000kgcm. **16**

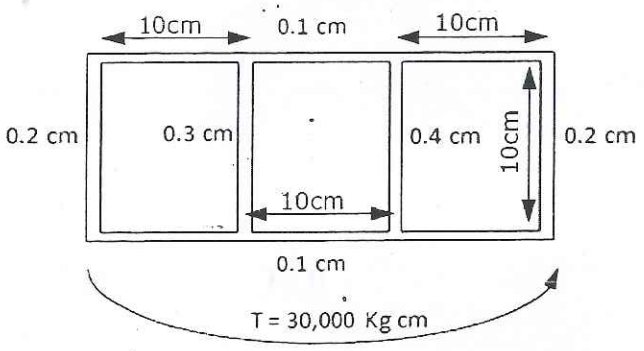

OR

8. a. What are various primary structural components of a passenger aircraft and explain their purpose. **08**
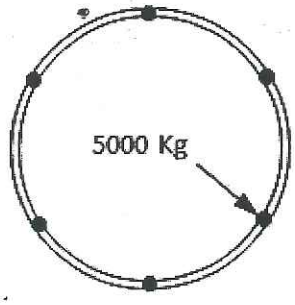
b. A circular fuselage of 320 cm diameter has 6 equi-spaced stiffeners and shear web. All flanges are of 5cm^2 cross-sectional area and the thickness of the skin is 2mm. find the shear flow in all the webs for a concentrated force of 5000kg applied as shown in the figure. **12**